Oxford Cambridge and RSA

Wednesday 14 May 2025 – Morning

AS Level Physics B (Advancing Physics)

H157/01 Foundations of physics

Time allowed: 1 hour 30 minutes

You must have:
- the Data, Formulae and Relationships Booklet

You can use:
- a scientific or graphical calculator
- a ruler (cm/mm)

Please write clearly in black ink. **Do not write in the barcodes.**

Centre number | | | | | | Candidate number | | | | |

First name(s) _____

Last name _____

INSTRUCTIONS
- Use black ink. You can use an HB pencil, but only for graphs and diagrams.
- Write your answer to each question in the space provided. If you need extra space use the lined pages at the end of this booklet. The question numbers must be clearly shown.
- Answer **all** the questions.
- Where appropriate, your answer should be supported with working. Marks might be given for using a correct method, even if your answer is wrong.

INFORMATION
- The total mark for this paper is **70**.
- The marks for each question are shown in brackets **[ ]**.
- This document has **24** pages.

ADVICE
- Read each question carefully before you start your answer.

© OCR 2025 [601/4744/1]
DC (SL/SG) 354786/3
OCR is an exempt Charity

Section A

You should spend a maximum of 25 minutes on this section.

Write your answer to each question in the box provided.

1 The power rating of a device is defined as the typical amount of:

A Electricity used in 1 second

B Energy transferred in 1 second

C Energy wasted by the device in 1 second

D Time taken to transfer 1 joule of energy

Your answer ☐

[1]

2 The diagram shows two rays of light passing through a converging lens.

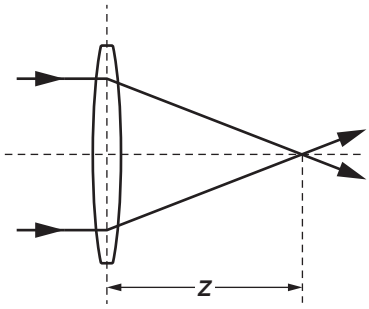

The distance *z* is called the:

A Focal length

B Focus

C Image length

D Power

Your answer ☐

[1]

© OCR 2025

3 Which point is best considered an outlier or anomaly?

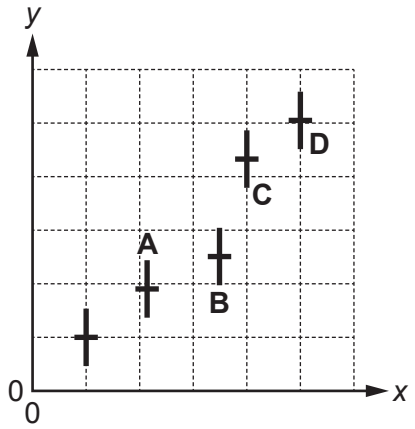

Your answer ☐

[1]

4 An analogue signal has amplitude 80 mV and picks up noise of amplitude 5 mV.

The number of useful quantisation levels needed to digitise this signal is equal to:

A $\log_2 \frac{80}{5}$

B $\log_2 \frac{85}{5}$

C $\log_{10} \frac{80}{5}$

D $\log_{10} \frac{85}{5}$

Your answer ☐

[1]

5 A typical value for the linear magnification achieved by a light microscope used in a secondary school is:

A 10^{-6}

B 10^{-2}

C 10^{2}

D 10^{6}

Your answer ☐

[1]

© OCR 2025

6 Which of the following quantities are vectors?

1 displacement

2 speed

3 impulse

A 1 only

B 2 only

C 1 and 3 only

D All three

Your answer ☐

[1]

7 What is the SI unit of momentum?

A $J\,s^{-1}$

B $J\,s^{-2}$

C $kg\,m\,s^{-1}$

D $kg\,m\,s^{-2}$

Your answer ☐

[1]

© OCR 2025

8 A student uses a microwave transmitter and receiver as shown in the diagram.

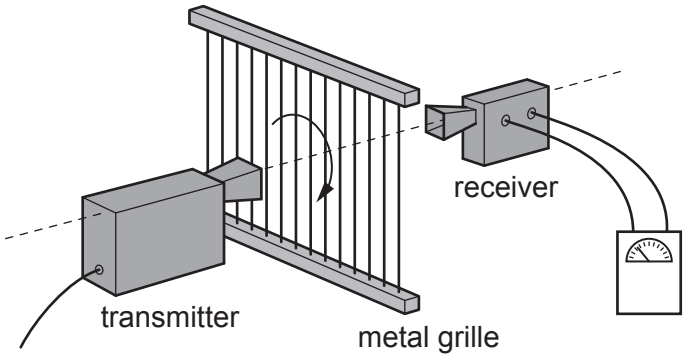

The microwaves from the transmitter are polarised.

The receiver meter reading changes as the metal grille is rotated through 180°.
Which of the following changes to the meter reading are possible?

A Decreases

B Decreases then increases

C Increases

D Increases then decreases then increases again

Your answer ☐

[1]

9 The correct representation of 0.036 mJ in standard form is:

A 0.036×10^{-3} J

B 0.36×10^{-4} J

C 3.6×10^{-5} J

D 3.6×10^{-6} J

Your answer ☐

[1]

© OCR 2025

10 Which class of material shows behaviour due to chain entanglement?

A Ceramic

B Glass

C Metal

D Polymer

Your answer ☐

[1]

11 A cylindrical metal wire of cross-sectional area A, has Young modulus Y.

The wire is put under tension T.

What is the equation for the strain of the wire?

A $\frac{AT}{Y}$

B $\frac{AY}{T}$

C $\frac{T}{AY}$

D TAY

Your answer ☐

[1]

© OCR 2025

12 The graph below shows the journey of a car.

The points **P–W** represent the times when the car changes its speed or accelerates.

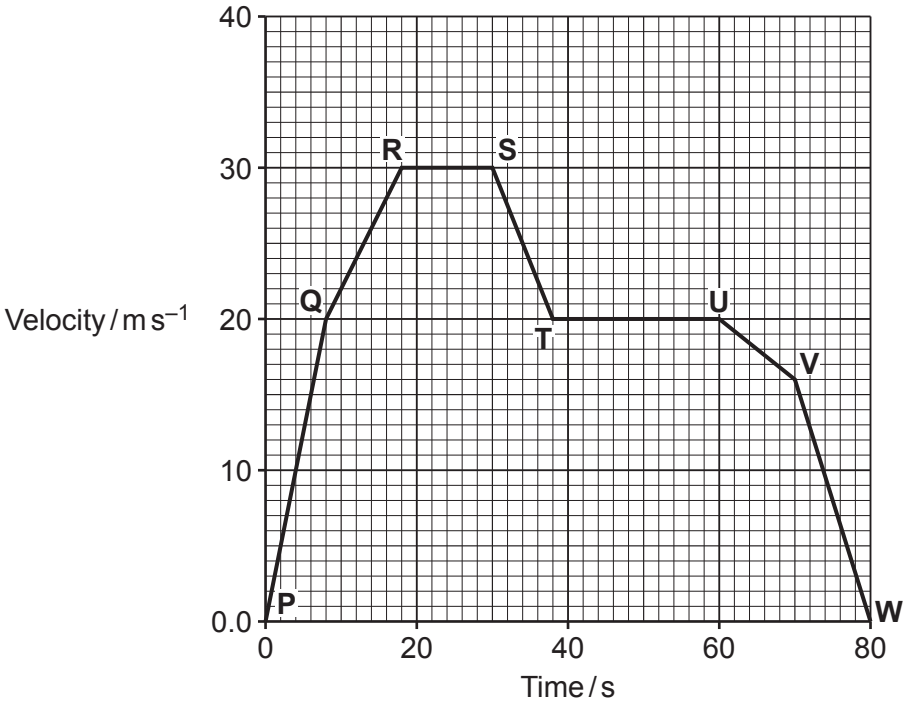

What is the approximate total distance travelled by the car on this journey?

A 0 m

B 30 m

C 1400 m

D 2400 m

Your answer ☐

[1]

© OCR 2025

13 Two groups of students measure the speed of sound in air using a resonance tube method.

Their results and the accepted true value are shown below.

Group **X** $(335 \pm 10)\,\mathrm{m\,s^{-1}}$

Group **Y** $(320 \pm 20)\,\mathrm{m\,s^{-1}}$

True value $(343 \pm 3)\,\mathrm{m\,s^{-1}}$

Which statement is true?

A Both groups have results consistent with the true value

B Both groups must have a systematic error

C Group **X** has a more accurate result

D Group **Y** must have a systematic error

Your answer ☐

[1]

14 The total kinetic energy of a motorcycle and its rider travelling at $12\,\mathrm{m\,s^{-1}}$ is 8.28 kJ.

What is the total mass of the motorcycle and rider?

A 57.5 kg

B 115 kg

C 182 kg

D 345 kg

Your answer ☐

[1]

© OCR 2025

15 The diagram shows the amplitude and phase of the phasors representing three waves of the same frequency.

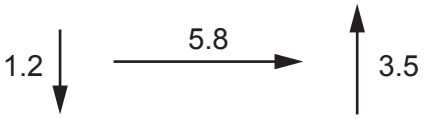

The waves arrive simultaneously at the same point. What is the amplitude at the point when the waves superpose?

A 6.2

B 7.5

C 10.5

D 38.9

Your answer ☐

[1]

16 In an isolated collision between two air-track gliders, which row of the table correctly describes the conserved quantities?

	Kinetic energy	**Momentum**
A	Always conserved	Always conserved
B	Never conserved	Sometimes conserved
C	Sometimes conserved	Always conserved
D	Sometimes conserved	Sometimes conserved

Your answer ☐

[1]

© OCR 2025

17 In an experiment to determine the acceleration due to gravity g, a paper cone takes time t to fall distance s.

A student measures t and s and calculates the acceleration due to gravity $g = \frac{2s}{t^2}$.

Which technique will cause an **inaccurate** result for g?

A Measuring s with a metre ruler with a worn end

B Measuring t with a stopwatch without milliseconds

C Repeating the timings only twice

D Using a different cone with more drag

Your answer ☐

[1]

18

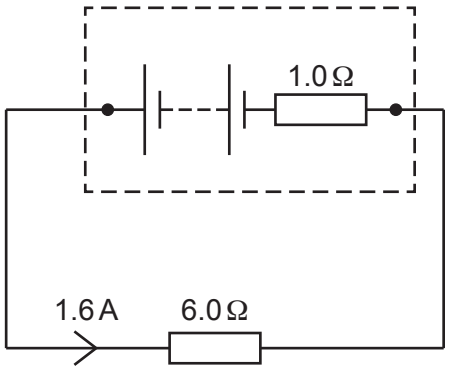

In the circuit shown above, what is the value of the cell e.m.f.?

A 1.6 V

B 8.0 V

C 9.6 V

D 11.2 V

Your answer ☐

[1]

© OCR 2025

19 A projectile is fired at $10\,\mathrm{m\,s^{-1}}$ horizontally from a 50 m high cliff.

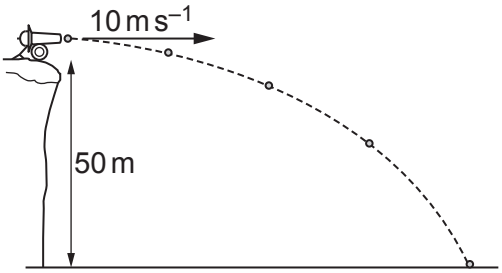

How long does it take for the projectile to hit the ground?

A 1.69 s

B 2.32 s

C 3.19 s

D 4.31 s

Your answer ☐

[1]

20 A diffraction grating has *n* lines per cm and is illuminated with a laser emitting light of wavelength λ. The first order maximum is observed at an angle θ from the axis.

The diffraction grating is replaced by one having 10% more lines per cm and illuminated by a laser with 10% higher frequency than the first laser. The first order maximum is observed at an angle θ' from the axis.

Which of the following is the correct value of $\sin\theta'$?

A $0.8 \sin\theta$

B $1.1 \sin\theta$

C $1.2 \sin\theta$

D $\sin\theta$

Your answer ☐

[1]

© OCR 2025

Section B

21 A child is flying a kite on a beach.

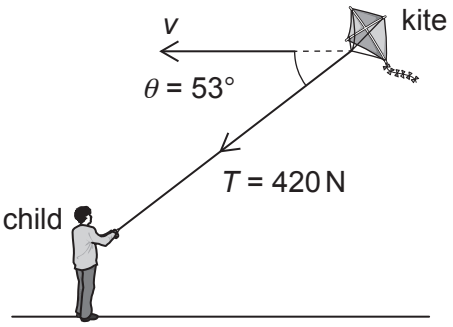

(a) Calculate the horizontal component of the tension T in the string.

Horizontal component = ... N **[2]**

(b) The child runs along the beach at a steady speed for 50 m. The string remains at the same angle.

Calculate the work done by the tension force in moving the kite.

Give the unit.

Work done = ... unit ..... **[3]**

© OCR 2025

22 The diagram shows the currents in the wires at a junction in a circuit.

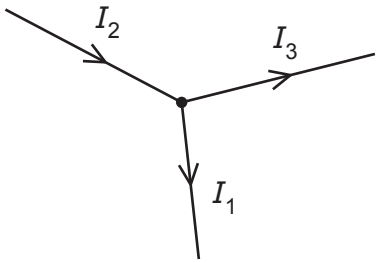

(a) Complete the expression for Kirchhoff's first law at the junction.

I_1 = ... **[2]**

(b) Kirchhoff's first law represents the conservation of charge at the junction.

Explain why.

.....

.....

.....

.....

..... **[2]**

© OCR 2025

23 A student is using a converging lens to form an image of a tree **in the distance**.

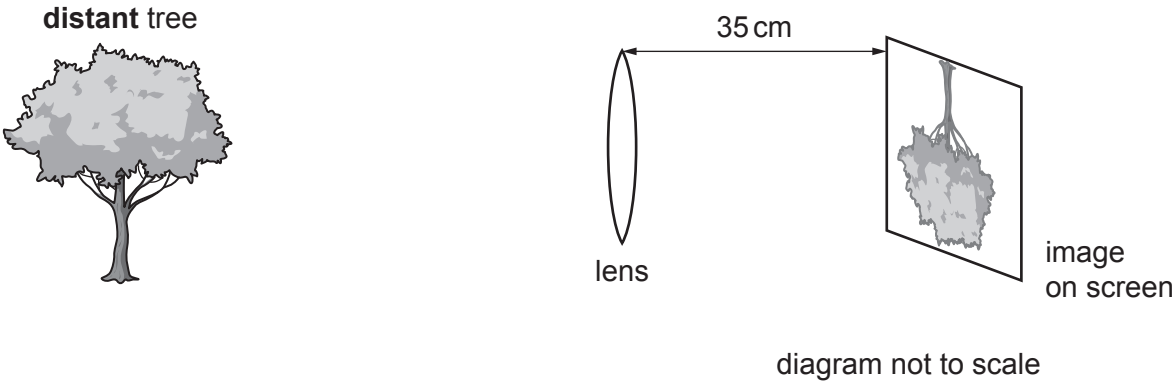

(a) Use the lens formula to show that the power of the lens is about +3D.

$$\frac{1}{v} = \frac{1}{u} + \frac{1}{f}$$

[3]

(b) Light reflected from the tree is refracted as it passes through the lens.

Draw wavefronts on the diagram below to show how the curvature of wavefronts is affected by the lens.

[3]

© OCR 2025

24

(a) Draw lines to connect the dots to describe how the number density of mobile charge carriers varies with the class of material.

Class of material			**Mobile charge carriers per m^3**
Metal	●	●	10^{16}
Semiconductor	●	●	10^{28}
Insulator	●	●	~ 0

[2]

The STM image below shows the structure of a compound of the metal molybdenum.

© Maria S. Sokolikova and Cecilia Mattevi, Direct synthesis of metastable phases of 2D transition metal dichalcogenides, 26 May 2020, pubs.rsc.org, Royal Society of Chemistry. Item removed due

The grey patches as indicated by the arrow are molybdenum atoms.

(b) Estimate the spacing between the molybdenum atoms.

Spacing = ... nm **[1]**

(c) The compound is used to obtain pure molybdenum metal.

Around 1 in 20 molybdenum atoms contributes a free electron.

Calculate an approximate value for the number density of free electrons in molybdenum.

Assume the spacing between molybdenum atoms stays the same in all directions.

Use your answer from part **(b)**.

number density = ... m^{-3} **[2]**

© OCR 2025

Section C

25 Light can be considered as both a wave and a particle phenomenon.

(a) State one piece of evidence that light travels as waves.

.....

..... **[1]**

(b) Explain how LEDs provide evidence that photons exchange energy in quanta.

.....

.....

..... **[2]**

(c) A class of students are measuring the threshold potential difference (p.d.) for a range of LEDs.

The class is split into 8 groups and each group has a set of four LEDs of different wavelengths from the same manufacturer.

The lowest and highest measured threshold p.d. across the groups is recorded in a set of class results, along with the mean across all groups.

The table shows the class results.

Wavelength / nm	**Frequency / 10^{14} Hz**	**Striking threshold p.d. / V**			**Calculated photon energy / 10^{-19} J**	**Calculated Planck constant / 10^{-34} J s**
		Lowest of group	**Highest of group**	**Mean of group results**		
470	6.38	2.17	2.65	2.41		6.03
503		2.40	2.88	2.67	4.27	7.16
585	5.13	1.99	2.36	2.17	3.47	6.76
620	4.84	1.68	2.03	1.84	2.95	6.10

(i) **Complete the table** with the **two** missing values. **[2]**

© OCR 2025

(ii) Calculate a mean value for the Planck constant.

Planck constant = ... × 10^{-34} J s **[2]**

(d) The class work out that their measurements produce an uncertainty in the value for the Planck constant of ±5%.

Determine whether the class mean value for the Planck constant and its uncertainty are consistent with the true value.

.....

..... **[2]**

© OCR 2025

26 Motors are used to move the components along the production lines of a manufacturing company.

Each motor is monitored using a vibration sensor.

Data from the sensor is used to predict when a motor is about to fail so it can be repaired before it stops the production line from working.

The input to the sensor is the amplitude of vibration of the motor.

The output from the sensor is a digitised version of the vibration amplitude over time.

(a) Suggest one advantage of having a digital, rather than analogue, output from the sensor.

..... **[1]**

(b) The vibration amplitude is digitised into 1024 different output levels.

(i) What is meant by the term **amplitude**?

..... **[1]**

(ii) Calculate the number of bits required to encode 1024 levels.

Number of bits required = ... bits **[2]**

(c) The highest vibration frequency of interest is 2 kHz.

Calculate the minimum number of samples that must be recorded per second.

Number of samples = ... s^{-1} **[2]**

© OCR 2025

(d) A different sensor generates 15 bits per sample and 8000 samples per second.

The output data is transmitted to a computer system using a wireless network.

An additional 9 bits per sample is transmitted to enable error-correction and sensor identification.

The network capacity is 48 Mbits per second.

Calculate the maximum number of these sensors that could communicate with the computer system on this network.

Number of sensors = ... **[2]**

(e) The computer system runs AI software that learns to detect anomalies in the sensor data that predict when a motor is about to fail.

Suggest why computer software may be better than a human at identifying anomalies.

.....

..... **[1]**

© OCR 2025

27 One of the optical properties of a material is its **refractive index**.

(a) Define refractive index.

.....

..... **[2]**

A student is measuring the refractive index of a transparent plastic material. The diagram shows the student's equipment with the angles of incidence (*i*) and refraction (*r*) marked. The student also has some plain paper, a protractor, a sharp pencil and some pins.

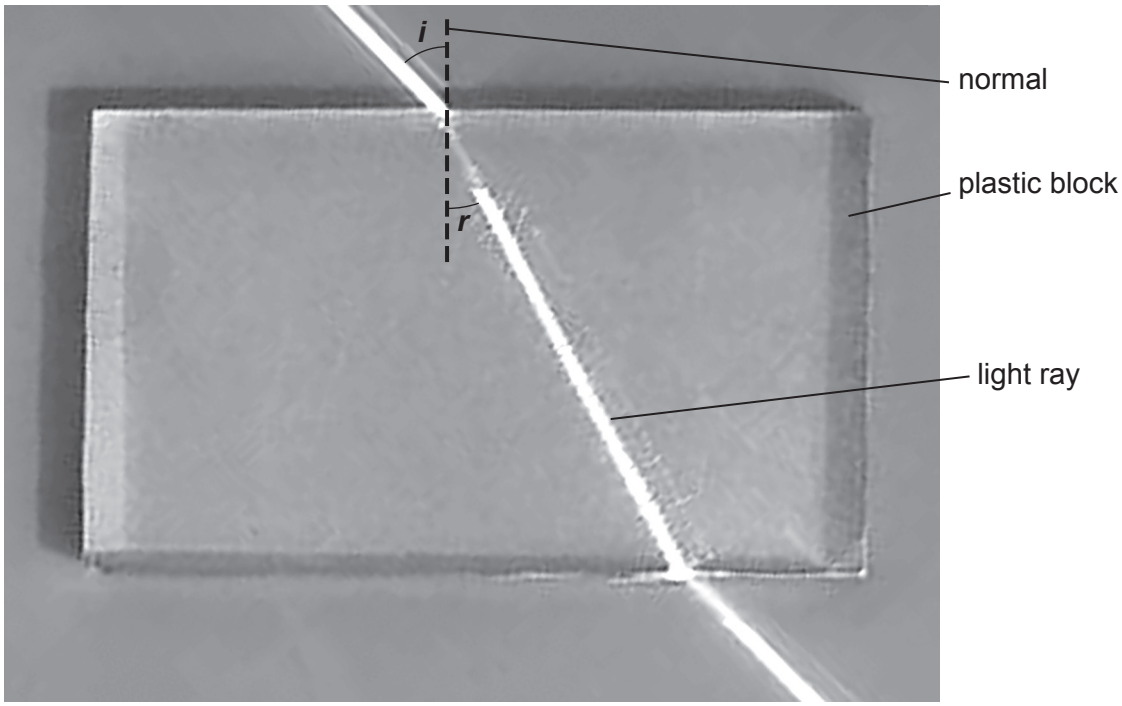

The student measures several angles of incidence and refraction, and repeats the entire process a second time. They record the results in this table.

Angle of incidence, *i* / degrees	**sin(*i*)**	**Angle of refraction (Trial 1)**	**Angle of refraction (Trial 2)**	**Angle of refraction (mean), *r* / degrees**	**sin(*r*)**
10	0.174	6	7	6.5	0.113
20	0.342	13	15	14.0	0.242
30	0.500	20	21	20.5	0.350
40	0.643	25	27	26.0	0.438
50	0.766	30	32	31.0	0.515
60	0.866	36	36	36.0	0.588

© OCR 2025

The student plots the graph of sin *i* against sin *r*.

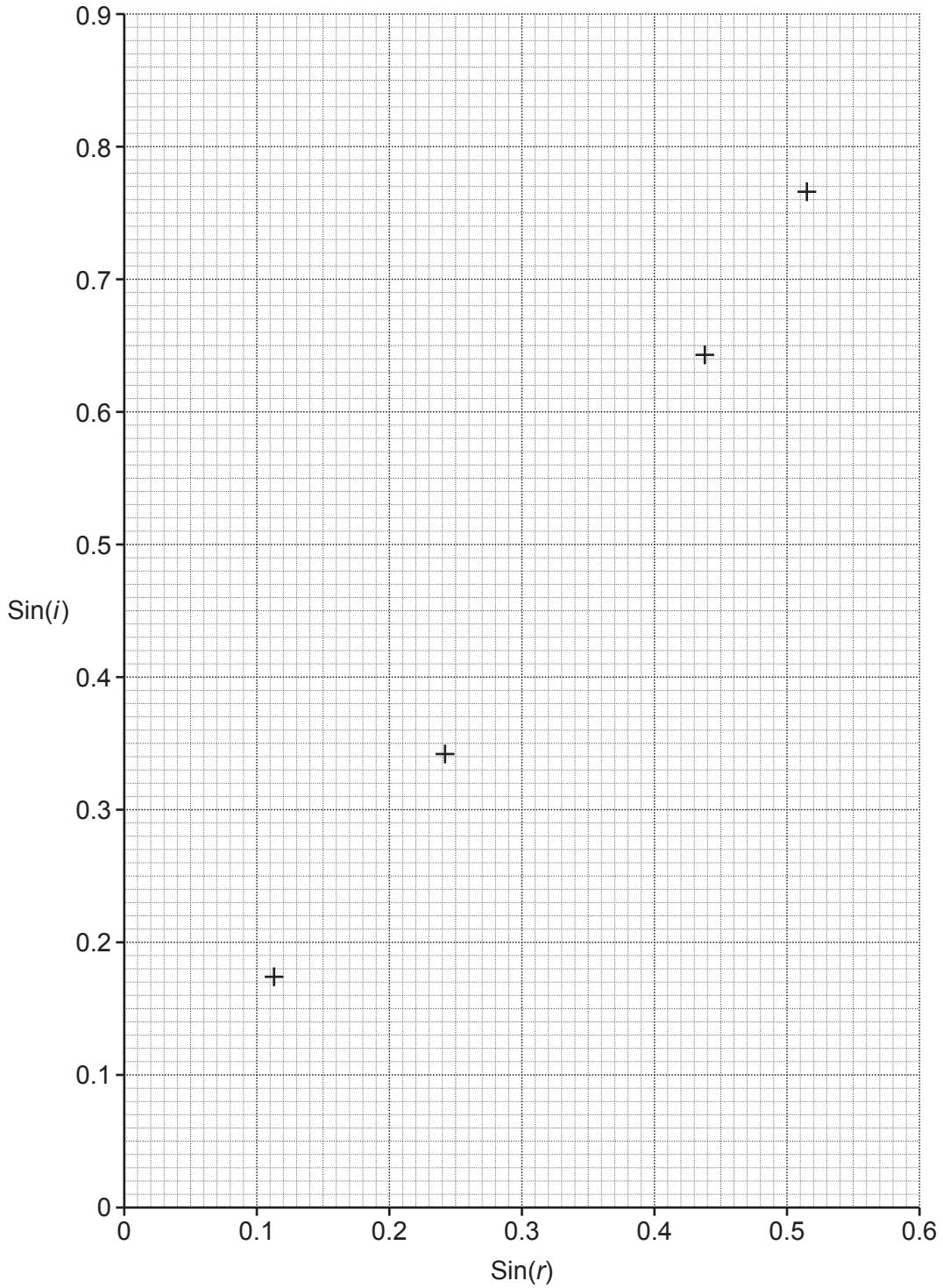

(b) Plot the **two** missing points on the graph. **[1]**

(c) Determine the refractive index of the transparent plastic material.
Use the gradient of the graph.

Refractive index = ... **[3]**

© OCR 2025

(d) The measurements of the angles of incidence and refraction can be inaccurate.

Suggest **two** reasons why.

1 .....

.....

2 .....

.....

[2]

(e) Two students discuss the experiment:

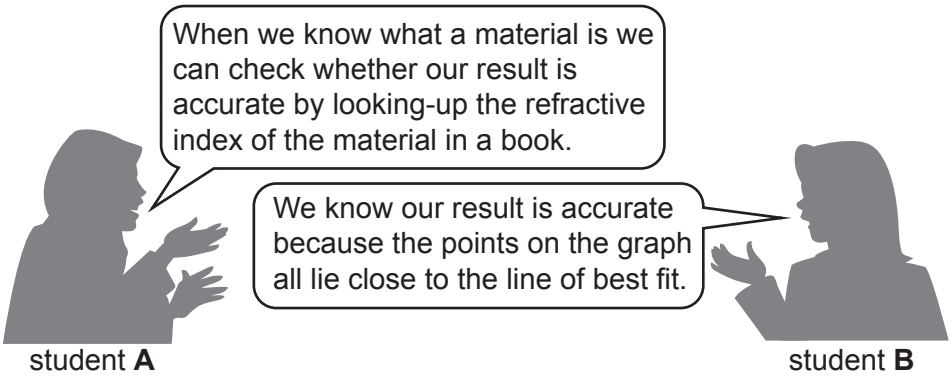

Explain whether each student is correct.

.....

.....

.....

.....

.....

.....

..... **[4]**

END OF QUESTION PAPER

© OCR 2025

EXTRA ANSWER SPACE

If you need extra space use these lined pages. You must write the question numbers clearly in the margin.

© OCR 2025

OCR
Oxford Cambridge and RSA

Copyright Information

OCR is committed to seeking permission to reproduce all third-party content that it uses in its assessment materials. OCR has attempted to identify and contact all copyright holders whose work is used in this paper. To avoid the issue of disclosure of answer-related information to candidates, all copyright acknowledgements are reproduced in the OCR Copyright Acknowledgements Booklet. This is produced for each series of examinations and is freely available to download from our public website (www.ocr.org.uk) after the live examination series.

If OCR has unwittingly failed to correctly acknowledge or clear any third-party content in this assessment material, OCR will be happy to correct its mistake at the earliest possible opportunity.

For queries or further information please contact The OCR Copyright Team, The Triangle Building, Shaftesbury Road, Cambridge CB2 8EA.

OCR is part of Cambridge University Press & Assessment, which is itself a department of the University of Cambridge.

© OCR 2025